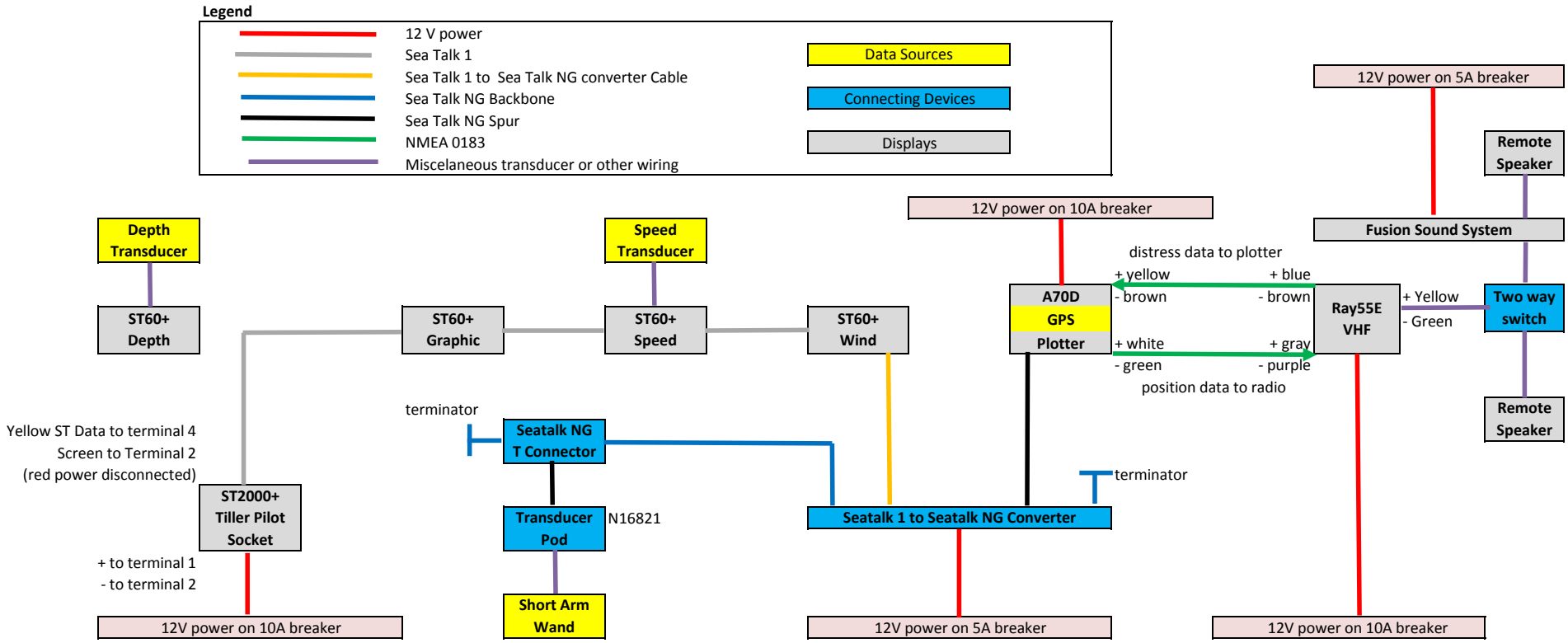
Legend
12 V power
Sea Talk 1
Sea Talk 1 to Sea Talk NG converter Cable
Sea Talk NG Backbone
Sea Talk NG Spur
NMEA 0183
Miscelaneous transducer or other wiring
Data Sources
Connecting Devices
Displays
12V power on 5A breaker
Remote Speaker
Fusion Sound System
12V power on 10A breaker
Depth Transducer
Speed Transducer
distress data to plotter
+ yellow
- brown
+ blue
- brown
A70D GPS Plotter
Ray55E VHF
+ Yellow
- Green
Two way switch
ST60+ Depth
ST60+ Graphic
ST60+ Speed
ST60+ Wind
+ white
- green
+ gray
- purple
position data to radio
Remote Speaker
terminator
Seatalk NG T Connector
Yellow ST Data to terminal 4
Screen to Terminal 2
(red power disconnected)
terminator
ST2000+ Tiller Pilot Socket
Transducer Pod
N16821
Seatalk 1 to Seatalk NG Converter
+ to terminal 1
- to terminal 2
Short Arm Wand
12V power on 10A breaker
12V power on 5A breaker
12V power on 10A breaker