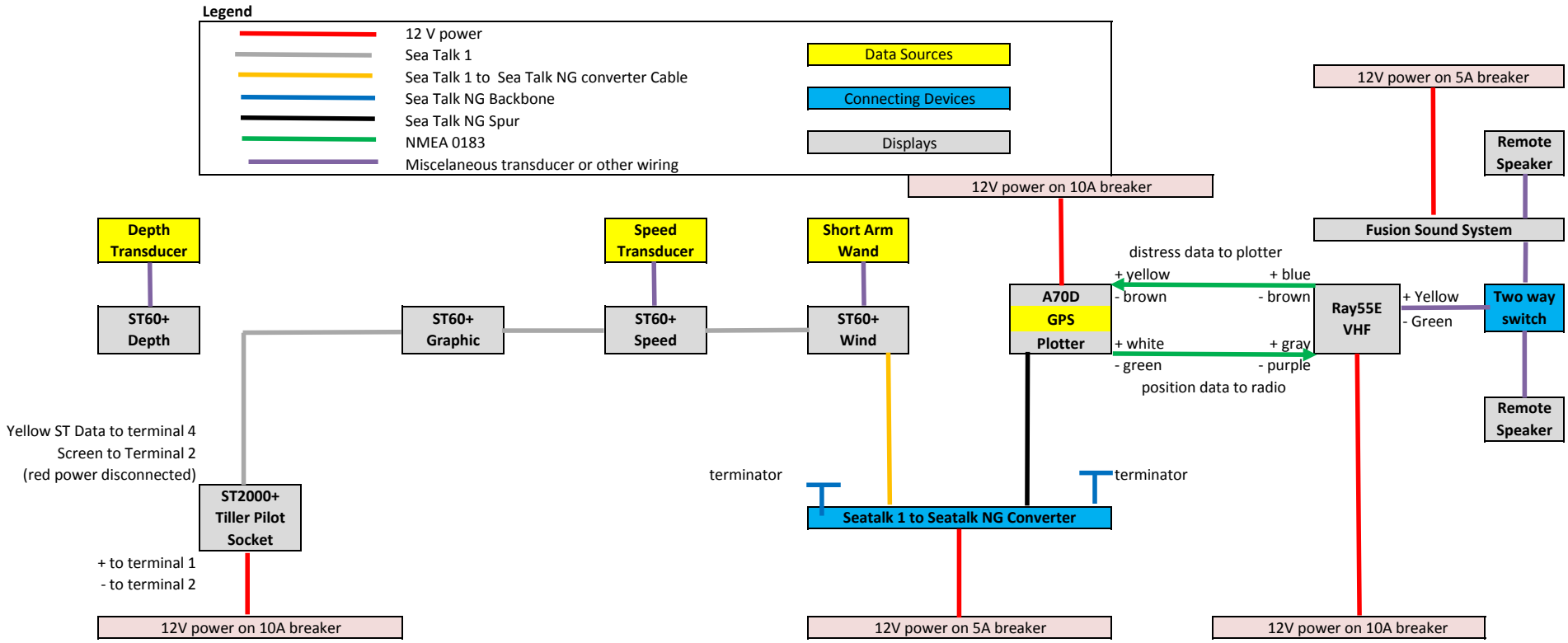
Legend
12 V power
Sea Talk 1
Sea Talk 1 to Sea Talk NG converter Cable
Sea Talk NG Backbone
Sea Talk NG Spur
NMEA 0183
Miscelaneous transducer or other wiring
Data Sources
Connecting Devices
Displays
12V power on 5A breaker
Remote Speaker
12V power on 10A breaker
Fusion Sound System
Depth Transducer
Speed Transducer
Short Arm Wand
distress data to plotter
+ yellow
- brown
+ blue
- brown
A70D GPS Plotter
Ray55E VHF
+ Yellow
- Green
Two way switch
ST60+ Depth
ST60+ Graphic
ST60+ Speed
ST60+ Wind
+ white
- green
+ gray
- purple
position data to radio
Remote Speaker
Yellow ST Data to terminal 4
Screen to Terminal 2
(red power disconnected)
terminator
terminator
ST2000+ Tiller Pilot Socket
Seatalk 1 to Seatalk NG Converter
+ to terminal 1
- to terminal 2
12V power on 10A breaker
12V power on 5A breaker
12V power on 10A breaker