USED ON:

NOTES:

1. FINISH TO BE ALOCROM 1200 AND POWDER COAT MATT BLACK
2. THIS DRAWING SUPPLIED IN ELECTRONIC FORMAT AS 3036290A.CGM IS THE "MASTER DOCUMENT". DXF DATA, AVAILABLE ON REQUEST, MUST BE VERIFIED TO THE MASTER SUPPLIED. LAST IGS DATA SUPPLIED: 3036290A.IGS.
3. REFER TO 3D MODEL FOR UNSPECIFIED DIMENSIONS.

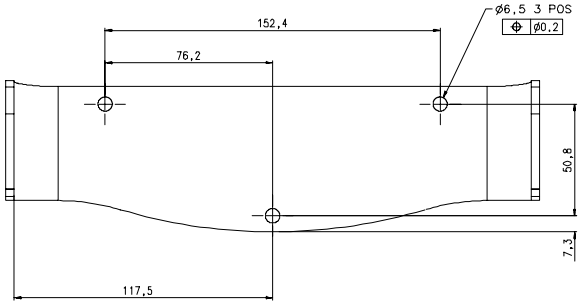

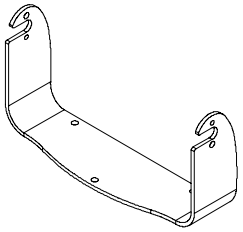

PICTORIAL VIEW

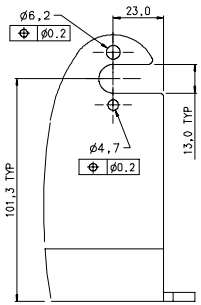

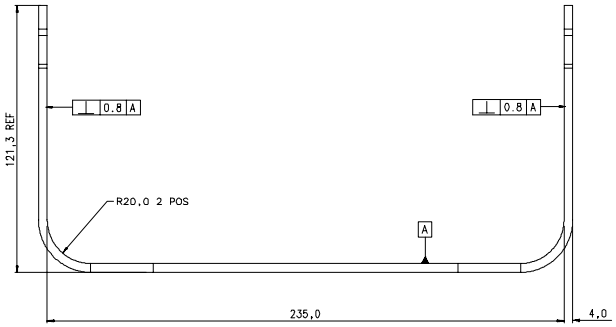

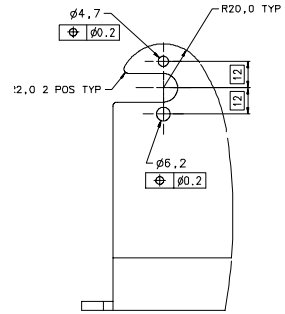

ITEM No	DRG/PART No	QTY	DESCRIPTION
PARTS LIST			

ISS	DESCRIPTION OF CHANGE	DATE
B	RE-QUALIFIED FOR OUTSOURCING	16.09.05 TP/RSA
B	DISTANCE BETWEEN BRACKET UPRIGHTS (RATCHET SPACING) AMENDED.	R.S/R.p 23.10.03
A	FIRST ISSUE	ORIGINAL

Raymarine

THE INFORMATION CONTAINED HEREIN SHALL NOT BE REPRODUCED WITHOUT THE PRIOR WRITTEN PERMISSION OF RAYMARINE LTD

©2001 RAYMARINE LTD

TOLERANCES UNLESS OTHERWISE STATED
X ±0.50
.X ±0.25
.XX ±0.10
.XXX ±0.05
ANGLES ±1°
(EXCL DRAFT)
DIMENSIONS IN MM

MACHINING: 1.6 SURFACE
SHARP INTERNAL CORNERS TO HAVE RADIUS 0.4 MAX
DEBURR ALL EDGES
SCALE: 1:1

DRAWN TO BS308 ⊕ DO NOT SCALE - IF IN DOUBT ASK

MATERIAL: ALUMINIUM ALLOY 5251 H24
FINISH: SEE NOTES

DR'N: R.P.S
DATE: 09.09.03
CK'D: A.S
APP'D: R.S.A.

TITLE: TRUNION BRACKET, C70

DRAWING No. 3036-290 A 1

SHT 1 OF 1