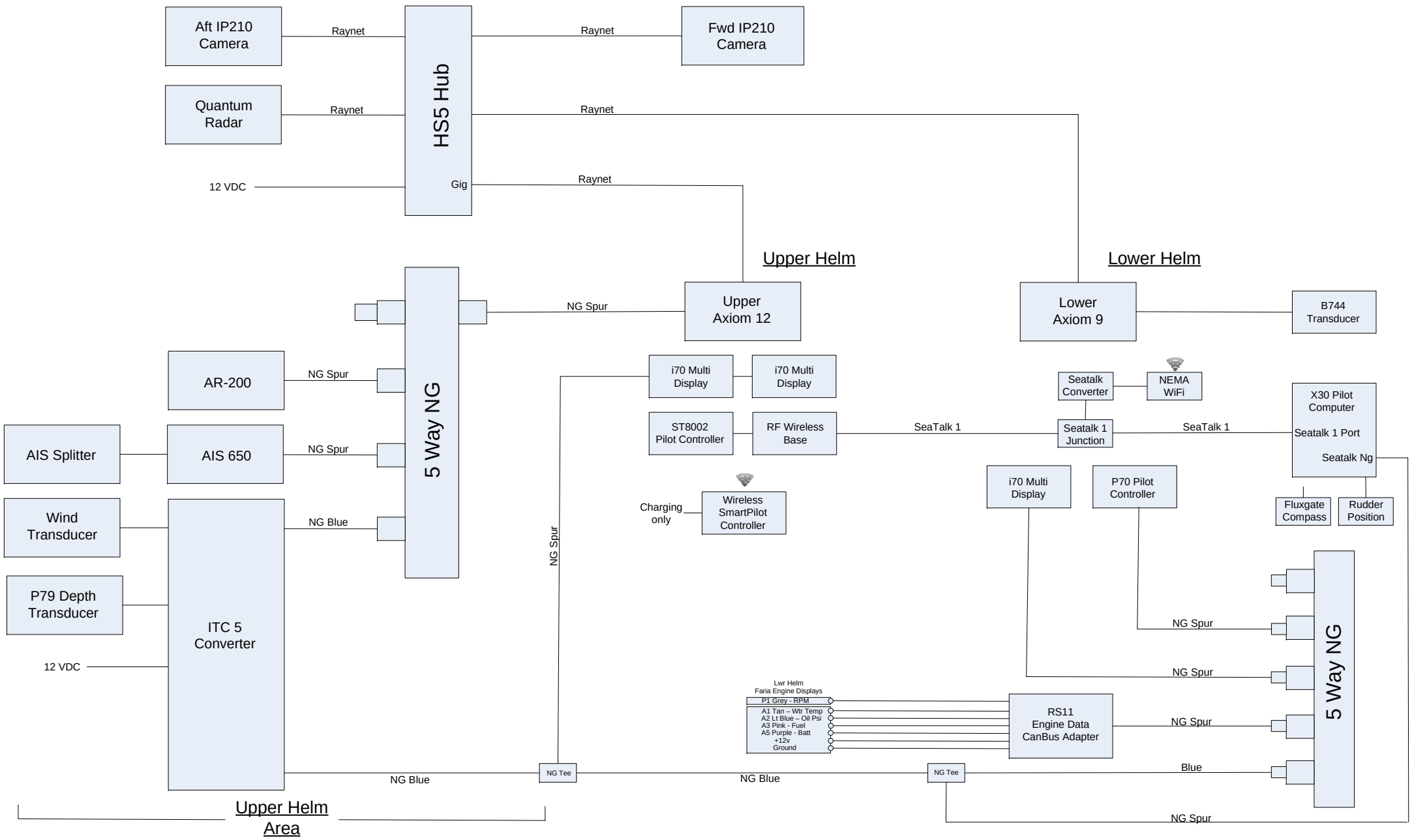2006 Mainship 400 - Indigo Star - Raymarine System Integration